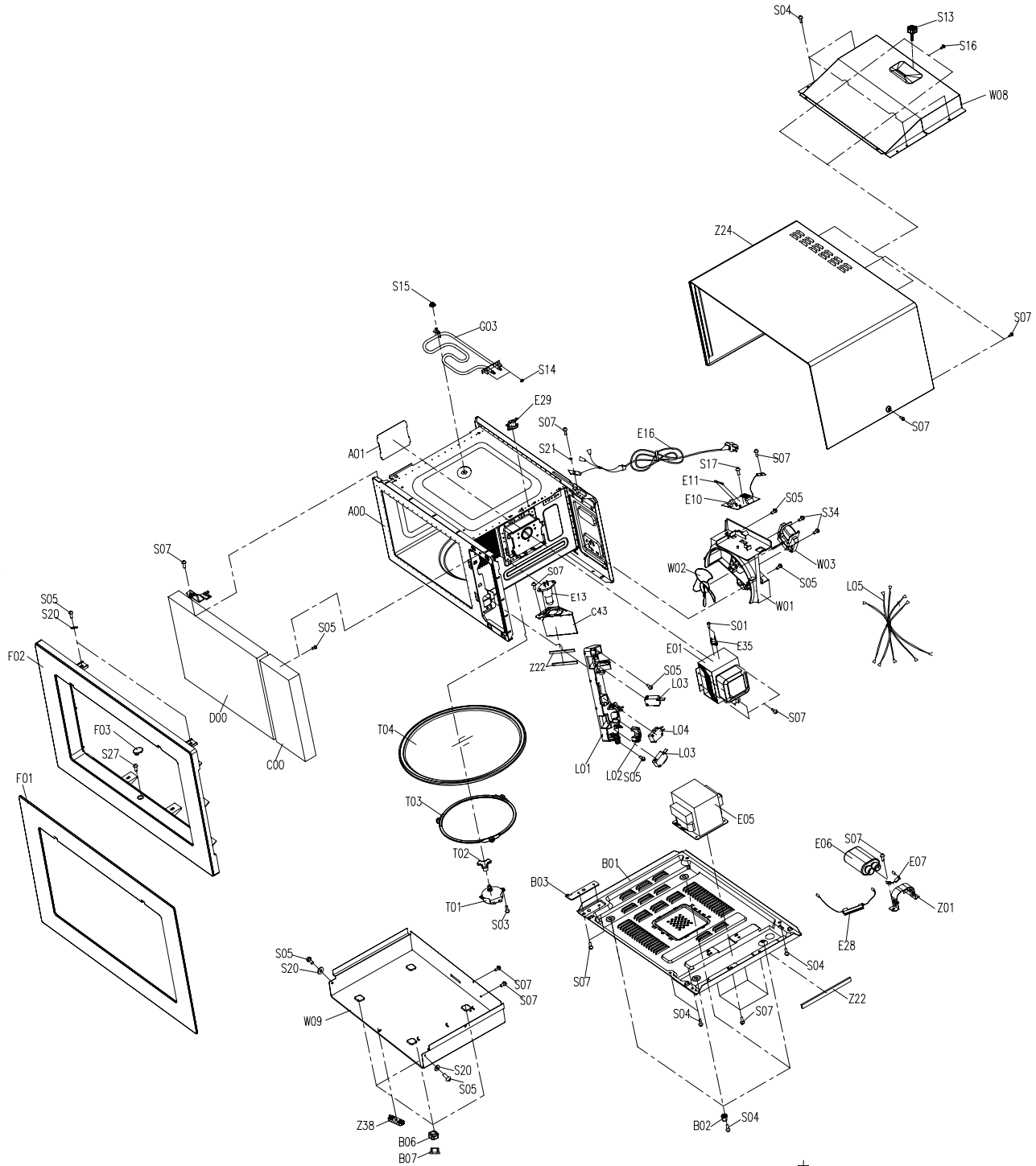

Z24	CASE OUT	1	
Z22	SPONGE	1	
Z01	HOLDER H.V.C	1	
W09	GUIDE AIR *U	1	
W08	GUIDE AIR *T	1	
W03	MOTOR FAN	1	
W02	FAN	1	
W01	GUIDE FAN	1	
T04	TRAY	1	
T03	RING ROTATING ASS'Y	1	
T02	COUPLER	1	
T01	MOTOR TRAY	1	
S34	SCREW 4*25TWBHC	2	
S32	SCREW ST4*16VAHNI	3	
S21	SPRING WASHER ø4.1	1	
S20	WASHER Ø4	4	
S17	SCREW ST3*10PWTHC	1	
S16	SCREW ST4*10TDB	2	
S15	NUT M5	1	
S14	NUT M4	2	
S07	SCREW CT4*8TBHC	20	
S05	SCREW ST4*12PWBHC	8	
S04	SCREW ST4*10TBHC	11	
S03	SCREW ST4*8PBHC	1	
S01	SCREW CT3*8BBHC	2	
L05	HARNESS MAIN	1	
L04	MICROSWITCH MONITOR	1	
L03	MICROSWITCH INTERLOCK	2	
L02	LEVER SWITCH	1	
L01	BOARD LATCH	1	
G03	HEATER SHEATH *T	1	
F02	TRIM PANEL	1	
F01	TRIM COVER	1	
S13	**BOLT**	1	
E35	THERMOSTAT 160/95 *V	1	
E29	THERMOSTAT 70/59 *H	1	
E28	ASS'Y H.V FUSE	1	
E16	POWER CORD ASS'Y	1	
E13	LAMP	1	
E11	FUSE	1	
E10	FILTER NOISE	1	
E07	H.V.DIODE	1	
E06	H.V.CAPACITOR	1	
E05	H.V.TRANSFORMER	1	
Z38	SPACER	1	
B06	SPACER SUPPORTER	4	
B07	FOOT SUPPORTER	4	
E01	MAGNETRON	1	
D04	ASS'Y BRKT HINGE *T	1	
D00	ASS'Y DOOR	1	
C43	LAMP COVER	1	
C00	ASS'Y C/PANEL	1	
B03	ASS'Y BRKT HINGE *U	1	
B02	LEG	4	
B01	BASE PLATE	1	
A01	COVER WAVE GUIDE	1	
A00	ASS'Y CAVITY	1	
No.	Part Name	Qty.	Material Remark

Model **EAG820B-S0CE40**

机密文件含有美的集团的保密信息,禁止任何人未经授权以任何形式使用(包括但不限于全部或部分地泄露、复制、或散发。)

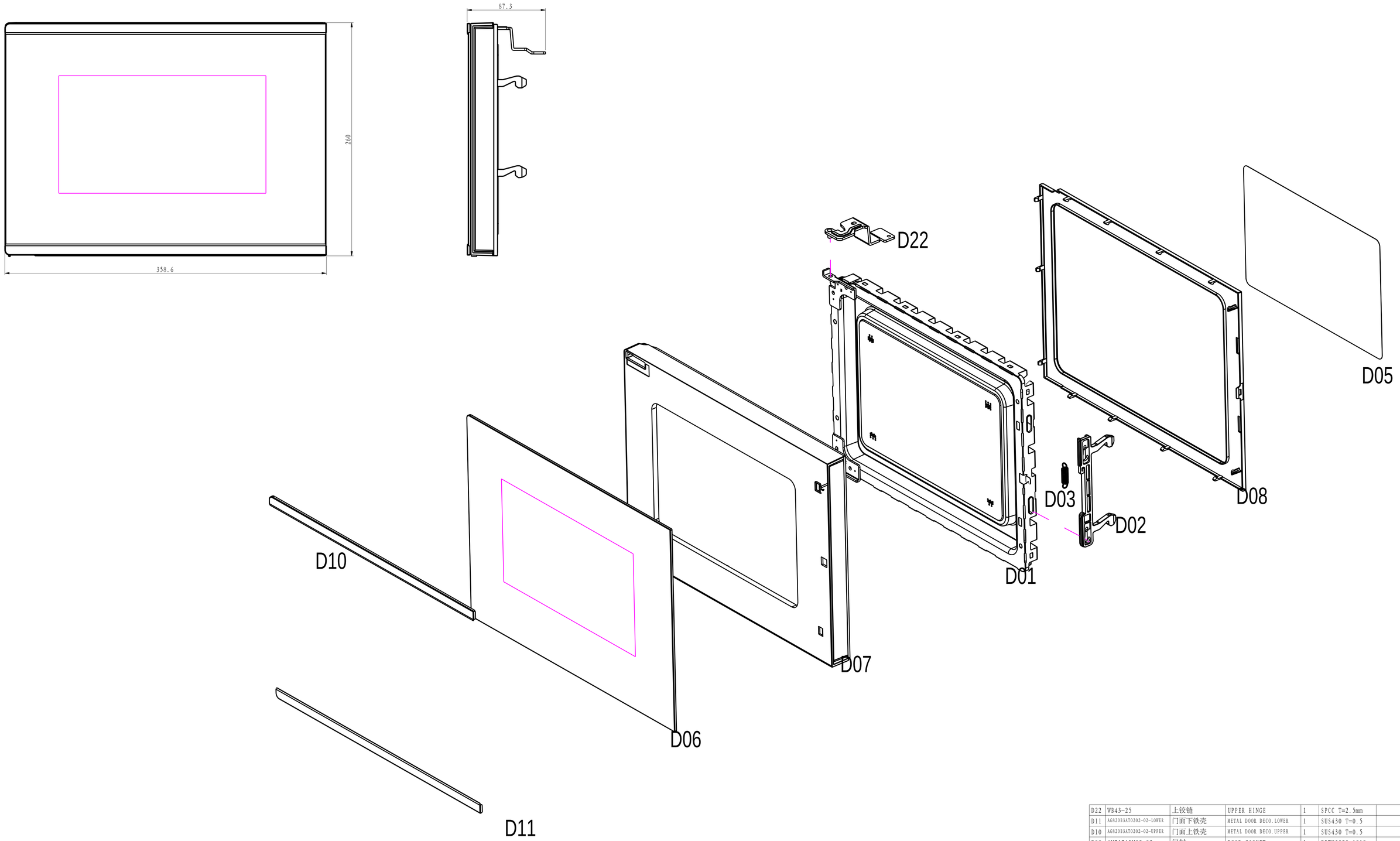

No.	图号 Drawing No.	零部件名称	Part Name	数量Qty	材料标记 Material	备注Remark
D22	WB43-25	上铰链	UPPER HINGE	1	SPCC T=2.5mm	
D11	AG820B3AT0202-02-LOWER	门面下铁壳	METAL DOOR DECO.LOWER	1	SUS430 T=0.5	
D10	AG820B3AT0202-02-UPPER	门面上铁壳	METAL DOOR DECO.UPPER	1	SUS430 T=0.5	
D08	AM717ABM02-02	门封	DOOR GASKET	1	PBTV3020-1010	
D07	AM717B8L0202-01	门面	DOOR PANEL	1	50%ABS+50%PC	
D06	AG820B3AT02-01	门窗	DOOR SCREEN	1	GLASS T=3.0	
D05	1089009	门贴	DOOR FILM	1	PET	
D03	WB12-02	门钩弹簧	LATCH SPRING	1	65Mn	
D02	Wb11-09	门钩	LATCH1	1	POM M90 阻燃等级HB	
D01	AG820BVM0201	门体组件	DOOR FRAME ASS'Y	1	SPCD 喷粉 黑色	

SCALE	F	M	C	V	ANGLE	
0.5<1 ≤0	±0.1	±0.1	±0.1		±1°	±1°
1.6<1 ≤0	±0.1	±0.1	±0.1	±0.1	±1°	±1°
3.0<1 ≤20	±0.1	±0.1	±0.1	±0.1	±1°	±1°
20<1 ≤100	±0.1	±0.1	±0.1	±0.1	±1°	±1°
100<1 ≤1000	±0.1	±0.1	±0.1	±0.1	±1°	±1°
1000<1	±0.1	±0.1	±0.1	±0.1	±1°	±1°

图幅A1 共 1 图 张 第三角图 正等轴测
单位mm 比例: 2
版本 (Version) 批准/日期 产品型号 AG820B3AT
广东美的厨房电器制造有限公司 审核/日期 图样代号 AG820B3AT02
图样名称 门组件